Jr. of Industrial Pollution Control 33(1)(2017) pp 782-786
www.icontrolpollution.com
Research

CONTINUOUSLY VARIABLE TRANSMISSION WITH A PLANETARY GEAR "a+h"

VLADIMIR IVANOVICH NEKRASOV *, OKSANA OLEGOVNA GORSHKOVA, RUSLAN ALBERTOVICH ZIGANSHIN AND MICHAEL SAMOYLOVICH BAHAREV

Surgut Oil and Gas Institute, Tyumen Industrial University 625000, Ural Federal District, Tyumen Region, Tyumen, Volodarsky street, 38, Russia

(Received 06 April, 2017; accepted 08 April, 2017)

Key words: Simple planetary gear, Friction variator, Sun gear, Planetary, Epicyclic gear, kinematics, Structure

ABSTRACT

The article considers the problem of extension of configuration and operation characteristics of the land transport vehicles due to the simplification of the structure of the speed variator, implementation of capabilities of the planetary gear while transforming and transmitting the torsion torque in various working modes without the interruption in torque delivery and at the shutdown of the variator. The kinematic diagrams of the continuously variable transmission with a frontal variable-speed friction drive unit and a simple three-link planetary gear in the mode "a+h" with a parallel and perpendicular location of input and output shafts were provided. The work of the planetary gear in various modes was described: the gear and cumulative mode without the interruption in torque delivery and during the shutdown of the variator. The technical and economic assessment of the use of the continuously variable transmission with a planetary gear "a+h" was provided..

INTRODUCTION

In The simple three-link PGs (planetary gears) are used as: single wheel reduction gears in which when one link stops the torsion torque is delivered to the sun gear and is removed from the other link, for example, from the carrier; double reduction gears; in the planetary gear boxes (Vishnyakov, *et al*., 1986). The advantages of the planetary gear boxes in comparison with the gear boxes having the fixed axels of the toothed gears are the possibilities to obtain the high gear transmission ratios at the small number of toothed wheels and also the smaller weight and dimensions but the planetary gear boxes are more expensive.

Planetary gears and their types-harmonic gear drives that have the small dimensions and weight satisfy completely the requirements of the decrease of specific amount of metal per machines among all types of mechanical transmissions. It is connected to the effect of multithreading and application of internal toothing (Vishnyakov, *et al*., 1986).

The simple three-link planetary gears can provide seven gears in the gear modes and three gears in the cumulative (integral) modes when the torsion torque is delivered to the two links and removed from the third one. The use of the planetary gears in the cumulative modes in combination with the basic fixed-ratio transmission allows to decrease significantly the range of reduction ratios of the obtained transmission unit in comparison with a basic gear box. The considered structures (Kudryavtseva and Kirdyashov, 1977) realize the step-like transformation of the torsion torque and that leads to the deterioration of the operation properties of LTVs (land transport vehicles) due to the interruption in torque delivery when changing the gears.

***Corresponding authors email: ettm@bk.ru**

The well-known continuously variable transmissions contain a friction variator and a planetary gear working in the cumulative (integral) mode (Nekrasov and Ivanov, 2010; Nekrasov and Ivanov, 2016b), but they also have some disadvantages: the multidisc friction variator works in the high load conditions because the main part of the torsion torque goes through it to the carrier of the planetary gear. The PG is used only in the cumulative mode.

Our task was to enlarge the configuration and operation characteristics of LTVs due to the continuous transformation and transmission of the torsion torque without the interruption in torque delivery when using the PG in the gear and cumulative modes. That is achieved by the installation of the continuous friction gear-a simple frontal variable-speed drive delivering the small part of the torsion torque to the sun gear and the main power flow is delivered by the cylindrical toothed gear to the carrier of the PG.

STRUCTURE AND KINEMATICS OF CONTINUOUSLY VARIABLE TRANSMISSION WITH A PLANETARY GEAR "a+h"

Fig. 1 shows a kinematic diagram of the continuously variable gear with the frontal variable-speed friction drive unit and a simple three-link PG

in the mode "a+h": (scheme 1)-parallel position of input and output shafts, (scheme 2)-perpendicular position of input and output shafts.

The input shaft 2 is located in the supports of the casing 1 of the continuously variable gear (scheme 1), on which the ring gear 3 is fixed and the driving cylindrical gear 4 is installed freely, on the ring gear 5 of which the clutch 6 is located for connection with the ring gears 3 of the input shaft or 7 of the casing 1. The small driving friction wheel 9 is installed on the dowel pin 8 of the input shaft 3 that is attached to the big driven friction wheel 10, fixed at the driven shaft 11. The driving conical gear 12 is fixed on the shaft 11 and connected to the driven conical wheel 12 that is fixed on the shaft 14, on the same shaft the sun gear 15 (a) of the PG is fixed. The driven cylindrical wheel 16 is fixed on the carrier 17 (h) on the axes 18 of which the satellites 19 are installed, connected to the sun gear 15 (a) and epicyclic wheel 20 (b) of the PG. The casing 21 of the epicyclic wheel 20 (b) is fixed on the output shaft 22, installed in parallel to the input shaft 2. The ring gear 23 with the lockup clutch of the PG 24 is located on the carrier 17 (h); the ring gear 25 is fixed near the ring gear 23 of the carrier 17 on the shaft 14.

In the (scheme 2) in comparison with the scheme 1, the input 2 is installed perpendicularly to the output shaft 22. The ring gear 3 with the clutch 6 is installed on the input shaft 2, the driving conical gear 12 is installed freely and connected to the driven conical wheel 13 fixed on the shaft 14; the driving cylindrical gear 4 is also fixed on the shaft 14. The three-position ring gear 23 of the extended length is located on the carrier 17 (h) with the clutch 24 for blockage of PG and shutdown of the carrier 23. The ring gear 25 is fixed on the shaft 26 near the ring gear 23 of the carrier 17 (h); the ring gear 7 of the casing 1 is located near the ring gear 25 for shutdown of the carrier 17 (h). Also the big friction wheel 10 is located on the input shaft 2, the small friction wheel 9 is installed on the dowel pin 8 of the shaft 26 of the sun gear drive 15 (a) of the PG. the shaft output 26 can be used as a

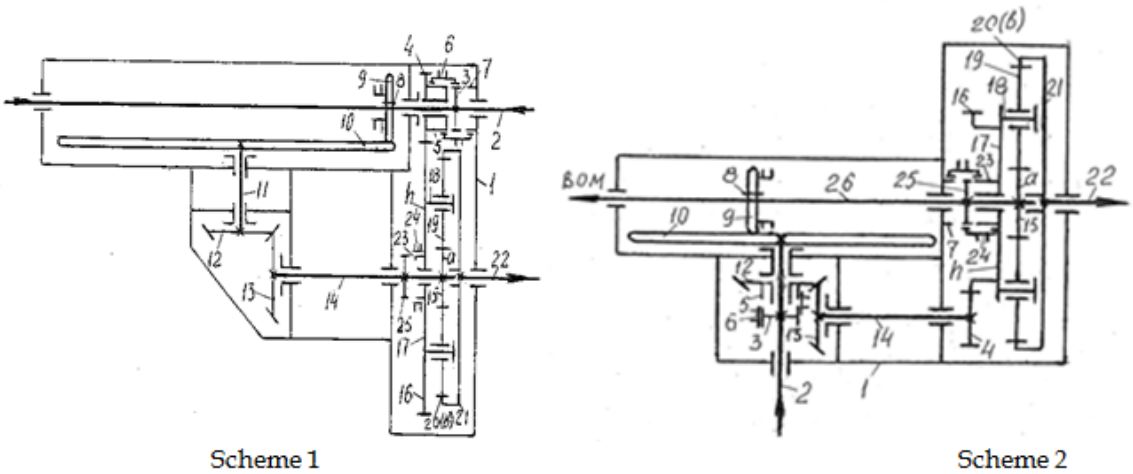

Fig. 1 The kinematic diagram of the continuously variable gear with the frontal variable-speed friction drive unit and the simple three-link PG in the mode "a+h": *Scheme* 1-parallel position of input and output shafts; *Scheme* 2-perpendicular position of input and output shafts.

PTS (power take-off shaft).

The simple PG consisting of three links: a sun gear (a), an epicyclic wheel (b) and a carrier (h) with satellites is characterized by the internal parameter $K=Z_b/Z_{a=}1.5–5$, which is equal to the ratio of teeth Z_b of the epicyclic wheel and Z_a of the sun gear (Nekrasov, *et al*,. 2016; Nekrasov and Ivanov, 2016a).

Summarizing the capacities of the PG for our case can be described by the relation:

$n_b=U_{bh}{}^a\, n_h+U_{ba}{}^h\, n_a=n_h\,(K+1)/K–n_a/K$;

Where n_a, n_h, n_b are the rotational rates of the sun gear, the carrier and the epicyclical wheel, rpm.

The kinematic characteristics of the continuously variable transmissions are shown in Fig. 2.

The PG can operate in several modes: gear mode; cumulative mode; emergency mode.

WORK OF PLANETARY GEAR IN GEAR MODE $U_{AB}{}^H$=-K

The upper index "h" points out the installed link of PG, low indices point out the links of the input "a" and output "b" of the torsion torque. The sign "minus" before the internal parameter "K" means the change of the rotation direction of the output link in comparison with the input. If we accept K=4.0; the rotational rate of the driven shaft 22 will be four times less the rotational rate of the sun gear 15 determined by the rotational rate of the input shaft 2 and the reduction ratio of the variator 10^{-9}, the driven shaft 22 will rotate in the direction opposite to the rotation of the sun gear 15.

In Fig. 1, the carrier 17 (h) is stopped by the clutch 6 that closed the ring gears 7 of the casing 1 and 5 of the driving cylindrical gear 4 (see the lower position of the clutch 6) that stops the driven cylindrical wheel 16 fixed on the carrier 17 (h). The torsion torque is delivered from the driving shaft 2 along the dowel pin 8 to the small friction wheel 9 and then to the big friction wheel 10, and then by means of the conical gear 12-13, the shaft 14 to the sun gear 15 (a) and satellites 19. The satellites 19 rotate on the axes 18 of the stopped carrier 17 (h), they deliver the increased torsion torque with the decrease rotational rate and at the same time they change the rotation direction of the epicyclic wheel 20 (b). The torsion torque is removed from the epicyclic wheel 20 (b) of the PG along the casing 21 of the epicyclic wheel and is delivered to the output shaft 22. Moving the small frictional wheel 9 along the dowel pin 8 regarding the big frictional wheel we change the value of the reduction ratio of the variator. In the position shown in Fig. 2, the variator works in the decelerating mode $-U_{var}>1.0$ and it is represented by the low direct line 1 in Fig. 2. At the reduction rate of the variator $U_{var}=5.0$ and $U_{con}=1.0$, the reduction ratio of the device will be $U_A=U_{var}\,U_{ab}{}^{h=}5 \times (-4)=-20$; it is marked by the point A on the lower line 1 (Fig. 2), the sign "minus" shows the change of rotation direction of the output shaft 22. When moving the wheel 9 to the center of the wheel 10, the value of the reduction rate is decreasing along the line 1 up to the point 0 (Fig. 2). For example, at $U_{var}=0.5$; the reduction ratio of the device will be $U_B=U_{var}\,U_{ab}{}^{h=}0.5 \times (-4)=-2.0$; it is marked by the point B on the lower line 1 (Fig. 2). At the further movement of the wheel 9 and crossing of the pivot center of wheel 10 the rotation direction of the shaft 11, the sun gear 15 and further up to the output shaft 22 will be changed, it is shown in Fig. 2 along the upper line 2 from the point 0 up. At $U_{var}=5.0$, the reduction ratio of the device will be $U_C=U_{var}\,U_{ab}{}^{h=}5 \times 4=20$; it is marked by the point C on the upper line 2 (Fig. 2).

In Fig. 2, the drive for the carrier 17 (h) from the output shaft 2 is disconnected by the clutch 6 (see left-side view), the carrier 17 (h) is stopped by the clutch 24 (see upper position), closing the ring gears 7 of the casing 1 and 23 of the carrier 17 (h). The torsion torque is delivered to the sun gear 15 (a) from the input shaft 2 to the small frictional wheel 10 and then to the small frictional wheel 9, along the dowel pin 8 to the shaft 26 on the sun gear 15 (a) and the satellites. If the wheel 9 is in the end left position the variator works in the accelerating mode $-U_{var}<1.0$. In the position shown in Fig. 2, the variator works in the decelerating mode-the force is transmitted from the small diameter to the big one. If $U_{var}=2.0$, the reduction ratio will be $U_D=U_{var}\,U_{ab}{}^{h=}2 \times (-4)=-8.0$; it was marked by the point D on the lower line 1 (Fig. 2). At the further movement of the wheel 9 and the crossing of the rotation center of wheel 10, the rotation direction of the shaft 26, the sun gear 15 and further up to the output shaft 22 will be changed.

WORK OF PLANETARY GEAR IN CUMULATIVE MODE $n_b=U_{bh}{}^a\, n_h+U_{ba}{}^h\, n_a=n_h\,(K+1)/K–n_a/K$

In comparison with the previous mode, the torsion torque on PG is delivered in two ways: to the sun gear 15 as it was described earlier, the main force flow is delivered by the toothed gears to the carrier 17.

In Fig. 1, the torsion torque is delivered from the output shaft 2 and the ring gear 3 of the clutch 6 by the cylindrical gear 4-16 to the carrier 17 of the axis 18 and the satellites 19. From the satellites 19 the

cumulative force of the sun gear 15 and the carrier 17 is delivered to the epicyclic wheel 20 and along the casing 21 to the output shaft 22. If conditionally we accept the rotational rate of the input shaft $n_{input=}n_2$=1000 rpm; $U_{var=}$5.0; $U_{cyl=}$4.0; $U_{con=}$1.0; the rotational rate of the carrier 17 $n_{h=}$1000/4=250 rpm; n_h $(K+1)/K$=250 (5/4)=312.5 rpm; rotational rate of the sun gear $n_{a=}n_{input}/U_{var=}$1000/5=200 rpm; n_a/K=200/4=50 rpm. The rotational rate of the epicyclic wheel 20 and the output shaft 22 is $n_b=n_h$ $(K+1)/K-n_a/K$=[(1000/4) (5/4)–(1000/5 × 4)]=312.5–50=262.5. The reduction ratio of the device U_E=1000/262.5=3.81; it is marked by the point E on the upper line 3 (Fig. 2). When moving of the wheel 9 in the direction of the wheel 10 and decrease of the reduction ratio of the variator, for example up to U_{var}=1.0; we will get $n_b=n_h$ $(K+1)/K$-n_a/K=[(1000/4) (5/4)–(1000/4)]=62.5; the reduction ratio of the device U_F=1000/62.5=16.0; it is marked by the point F on the upper line 3 (Fig. 2). At U_{var}=0.8, we will get n_b=0, and $U=\infty$; this condition is represented by the vertical dashed line at the level U_{var}=0.8 in Figure 2. At the further moving of the wheel 9 and the crossing of the rotation center of wheel 10 the rotation direction of the shaft 11, the sun gear 15 and further up to the output shaft 22 will be changed. If $U_{var=}$0.6, in this case the signs before n_h and n_a will be the same n_b=-n_h $(K+1)/K-n_a/K$=[-(1000/4) (5/4)–(1000/(0.6 × 4)]=-104.2; the reduction ratio of the device U_I=1000/(-104.2)=-9.6; it is marked by the point I on the lower line 4 (Fig. 2), the sign "minus" points out the rotation direction change of the output shaft 22.

In contrast to (Fig. 1), the torsion torque to the carrier 17 (h) in Fig. 2 is delivered not directly along the cylindrical gear 4-16 but additionally to the conical gear 12-13, $U_{con=}$1.0 and the shaft 14, at the same time the clutch 6 (see right-side position) closes the ring gears 3 of the input shaft 2 and 5 of the driving conical gear 12. The torsion torque from the input shaft 2 along the ring gear 3 and the clutch 6 is delivered to the ring gear 5 and the driving conical gear 12, then to the driven conical gear 13, the shaft 14, the driving cylindrical gear 4, the driven cylindrical wheel 16, the carrier 17 (h), the axes 18 and the satellites 19.

Also the torsion torque is delivered from the input shaft 2 to the big frictional wheel 9 along the dowel pin 8 to the shaft 26, the sun gear 15 (a) and the satellite 19. Then, as in the scheme 1 it is delivered to the epicyclic wheel 20 (b) and the output shaft 22. The rotational rate of the carrier $n_{h=}n_{input}/U_{cyl=}$1000/4=250 rpm; n_h $(K+1)/K$=250 (5/4)=312.5 rpm as in the (scheme 1). If the small frictional wheel is in the end right position the variator works in the accelerating mode, when the diameter ratio of the wheels 10 and 9 is equal to 5; U_{var}=0.2; rotational rate of the sun gear $n_{a=}n_{input}/U_{var=}$1000/0.2=5000 rpm; n_a/K=5000/4=1250 rpm; at these conditions the rotational rate of the epicyclic wheel 20 (b) and the output shaft 22 $n_b=n_h$ $(K+1)/K-n_a/K$=312.5–1250=-937.5 rpm; U_J=1000/(-937.5)=-1.067; this result was marked by the point J on the lower left curve 4 (Fig. 2).

WORK OF PLANETARY GEAR IN EMERGENCY MODE–VARIATOR BREAKDOWN

We take the small frictional wheel 9 out of the contact with the big frictional wheel 10, and block the PG by the clutch 24 closing the ring gears 23 and 25. Only cylindrical clutch 4-16 with $U_{cyl=}$4.0 functions.

It is reasonable to use the gear mode only at low load, for example, at the empty LTV, because the whole torsion torque is realized by the frictional contact of the wheels 9 and 10. The cumulative mode is used for the loaded LTV. The work of the device in the scheme 2 with the change of the direction rotation of the carrier 17 in the mode n_b=-n_h $(K+1)/K-n_a/K$ is not reasonable-the slopping line 5 is above the abscissa axis (Fig. 2).

TECHNICAL AND ECONOMICAL ASSESSMENT OF CONTINUOUSLY VARIABLE TRANSMISSION WITH PLANETARY GEAR "a+h"

The planetary gear boxes in comparison with the gear boxes having the fixed axes of the toothed gears have some advantages: the possibility to obtain large reduction ratios at the small number of toothed wheels; smaller weight and dimensions and at the same time the planetary gear boxes are more expensive.

The technical result is obtained due to the installation of the continuous frictions gear containing the frictional variator and a simple three-link planetary gear, at the same time the input and output shafts can be installed by two ways: in parallel and perpendicularly.

SUMMARY

The use of the continuous variable transmission with the planetary gear "a+h" provides the extension of the configuration and operation capacities of LTVs due to the continuously variable transformation and transmission of the torsion torque without the interruption in torque delivery while using the planetary gear in the gear and cumulative modes.

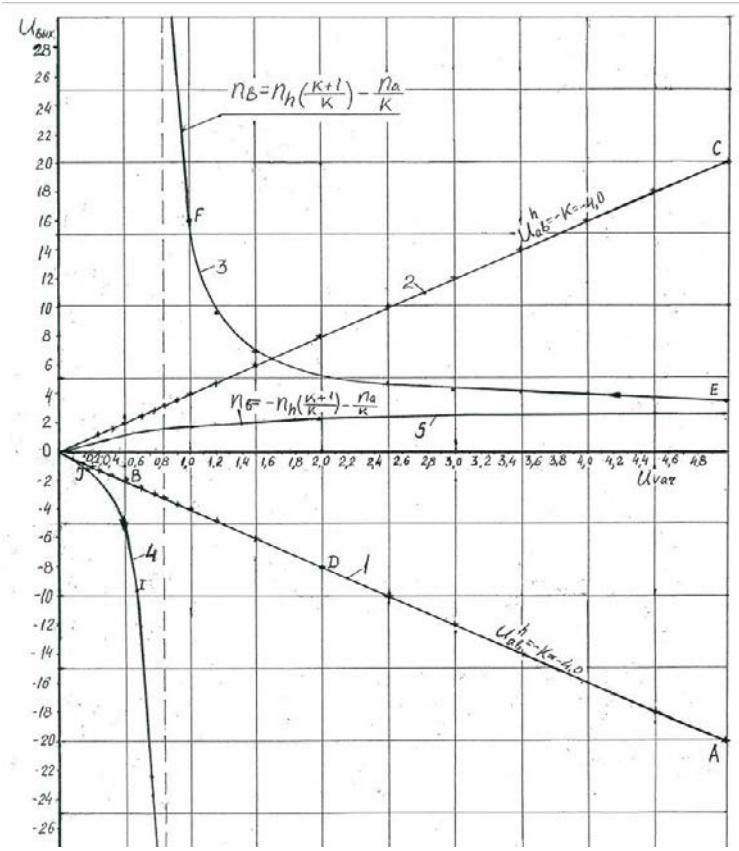

Fig. 2 Kinematic characteristics of the continuously variable transmissions.

CONCLUSION

The offered structure of the continuously variable transmission with the planetary gear "a+h" extents the configuration and operation capacities of LTVs, provides the wider range of the conditions of their operation. The main disadvantage of the frictional gear that is the accelerated wearing out of the working surfaces in the contact places of their wheels due to the high loads is decreased. In the offered structure, the main power flow is transmitted by the cylindrical toothed gear to the carrier of the PG, the smaller part of the power flow is driving and it is delivered by the frontal variable-speed drive to the sun gear of the PG.

CONFLICT OF INTEREST

The authors confirm that the submitted data does not contain conflict of interest.

REFERENCES

Kudryavtseva, V.N. and Kirdyashov, Y.N. 1977. Planetary Transmission. Guide. Leningrad: Mashinostroenie.

Nekrasov, V.I., Ziganshin, R.A. and Gorshkova, O.O. 2016. Kinematics of simple planetary mechanism. *Int. J. Appl. Eng. Res*. 11(16) : 8961-8965.

Nekrasov, V.I. and Ivanov, I.A. 2010. Patent RU 2397344. Patent RU 2397344. Turning and starting device of the gas turbine power plant.

Nekrasov, V.I. and Ivanov, I.A. 2016a. Patent RU 2581269. Patent RU 2581269. Turning and Starting Device of the Gas Turbine Power Plant.

Nekrasov, V.I. and Ivanov, I.A. 2016b. Patent RU 2583476. Turning and starting device of the gas turbine power plant.

Vishnyakov, N.N., Vakhlamov, V.K., Narbut, A.N., Shlippe, I.S. and Ostrovtsev, A.N. 1986 Automobile: principles of structure. Moscow: Mashinostroenie, pp. 304.